GPMC/GZMC

HIGH PRESSURE JET FILTER

High pressure jet filter type is the latest product version for the air jet filter series. This filter type is suitable for industrial applications to separate dust from air, which operates in pressurized environments.

GOLDEN GRAIN

info@g-grain.com

More details please visit www.g-grain.com and download

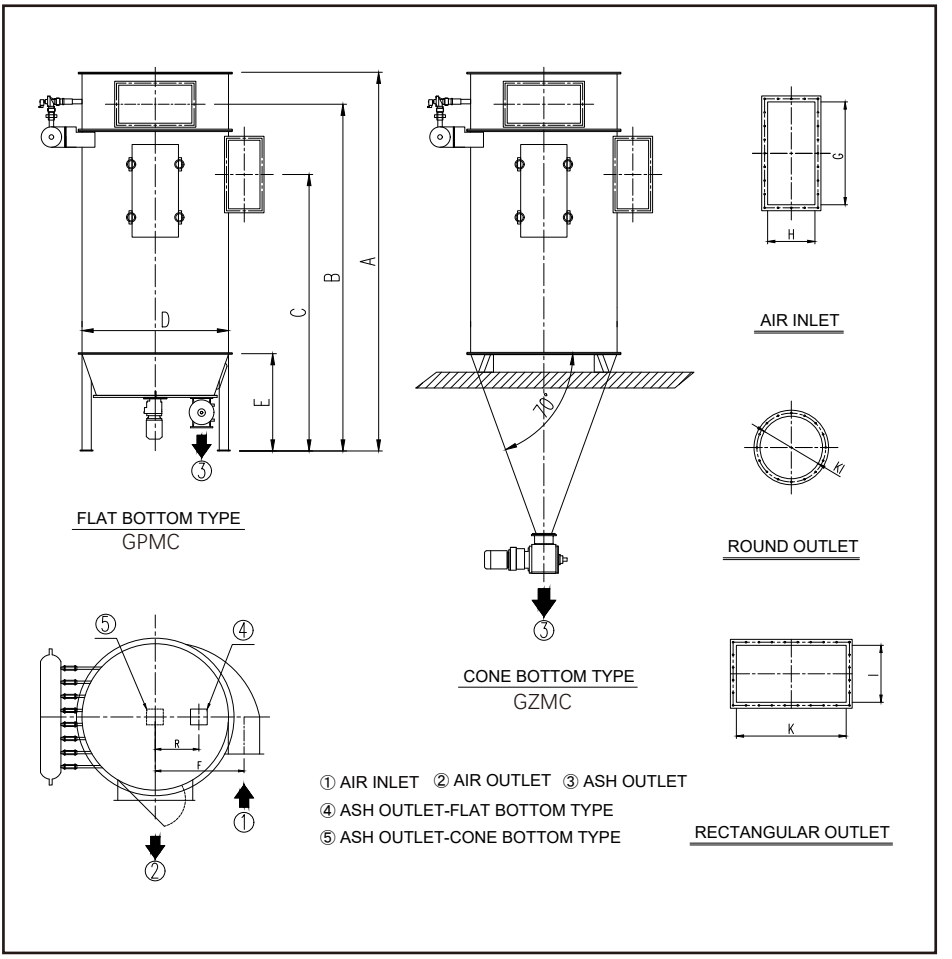

Model	Sleeve length (mm)	Filtering area (m^2)	Air volume (m^3/h)	A (mm)	B (mm)	C (mm)	D (mm)	E (mm)	R (mm)	F (mm)	H×G (mm)	KI (mm)	Air lock (kw)	Dust scraper (kw)	High pressure pump(kw)	Weight (kg)
GPMC-26	1800	17.6	3168-4224	3461	3156	2503	1140	1050	425	708	275×500	Φ450	0.55	1.1	1.5	1128
	2000	19.6	3528-4704	3661	3356	2703										1184
	2400	23.5	4230-5640	4061	3756	3103										1254
GPMC-39	1800	25.7	4626-6168	3461	3181	2433	1370	1050	430	830	290×640	Φ500	0.75	1.5		1634
	2000	28.7	5166-6888	3661	3381	2633										1715
	2400	34.6	6228-8304	4061	3781	3033										1782
GPMC-52	1800	35.3	6354-8472	3461	3136	2383	1580	1050	470	960	340×740	790×410	1.1			1969
	2000	39.1	7038-9384	3661	3336	2583										2068
	2400	47	8460-11280	4061	3736	2983										2173
GPMC-78	1800	52.9	9522-12696	3461	3161	2361	1840	1050	620	1163	485×785	845×460	1.1	1.5	2.2	2745
	2000	58.7	10566-14088	3661	3361	2561										2882
	2400	69.1	12438-16584	4061	3761	2961										3014
GPMC-104	1800	68.6	12348-16464	3461	3161	2336	2020	1050	640	1270	520×835	1090×460	1.5			3500
	2000	76.5	13770-18360	3661	3361	2536										3678
	2400	92.1	16578-22104	4061	3761	2936										3872
GPMC-130	1800	88.2	15876-21168	3461	3166	2303	2350	1050	830	1447	530×900	1200×470	1.5	1.5	3	3105
	2000	98	17640-23520	3661	3366	2503										3159
	2400	115.2	20736-27648	4061	3766	2903										3269